VHFER

50 MC. AND UP

LEARN BY DOING

Volume 3, No. 12 December, 1965

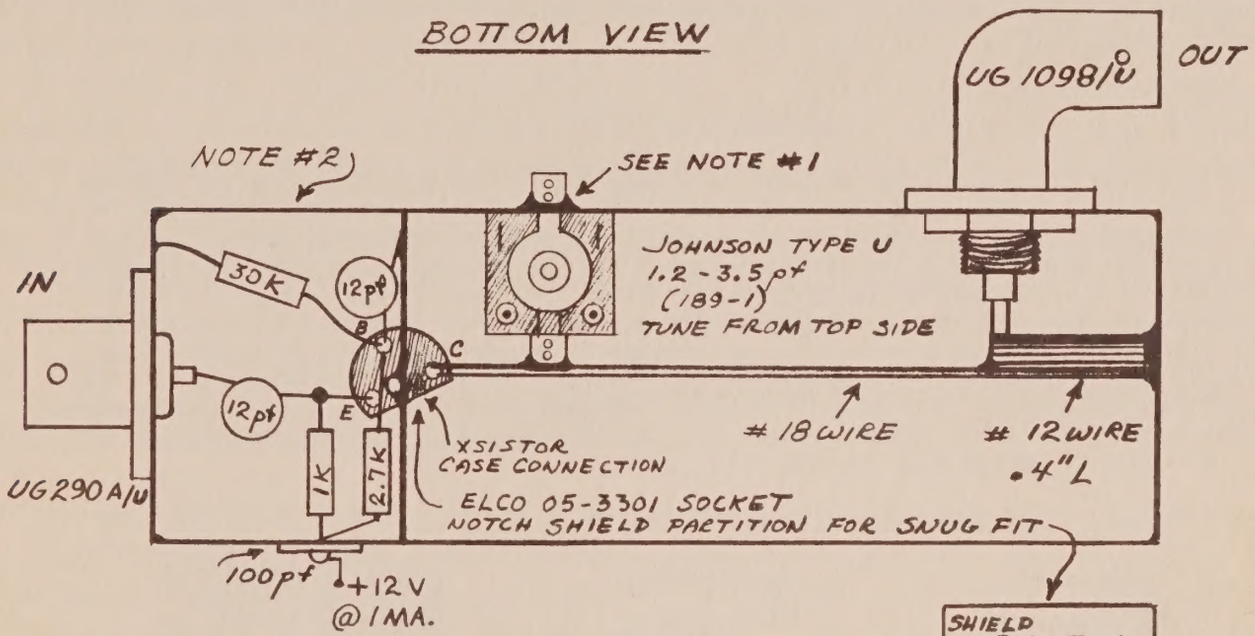

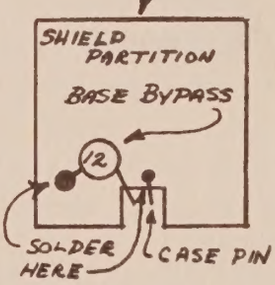

1. Drill a small hole in the copper box.
   Pull rotor tab through side. Hold firm and solder.
2. Box is 1"x1"x3". Solder 2 end plates and 1 partition.
3. Suggested layout for cascade operation (2 stages) where integral construction is desired.

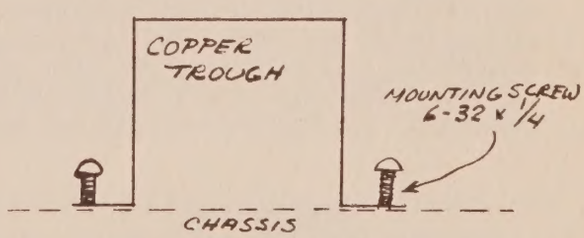

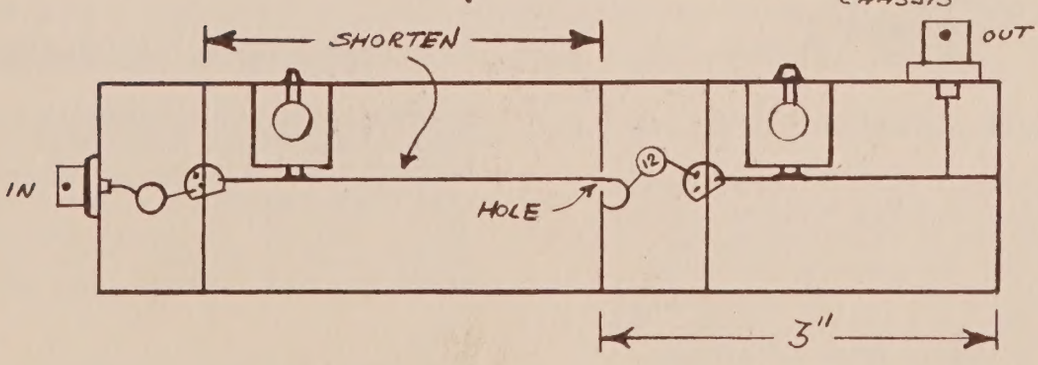

A 432 PREAMPLIFIER

NEW FIRM! NEW PRODUCTS!

WIDE BAND AMPLIFIER

Modular, two transistor, silicon, wide band amplifier for preamplifier and general lab service are designed for use in 50 ohm coax systems. Frequency response is within one db from 10 to 250 megacycles. Gain over this bandwidth is guaranteed to be 10 db minimum. Typical noise figure is less than 5 db at 200 megacycles. Modules may be cascaded for increased gain without instability. Maximum input voltage for linear operation is 500 millivolts peak-to-peak. Model WB-1I is internally powered by two 9 volt batteries (supplied) and model WB-1E may be powered from an external source (not supplied). The amplifiers are housed in 4"x2"x15/8" minibox, grey hammertone enameled. Connectors: N, BNC, UHF or RF Phono. Price: $20.50 for either model, postpaid.*

RECEIVER PROTECTORS

Why buy protection? Semiconductors utilized in preamplifiers and converters can be severly damaged by leakage of transmitter power through inadequate antenna transfer relays. By placing a receiver protector between the relay and the protected unit this damage can be averted. Two model are offered: the RP-1 covering from 3 to 54 megacycles with better than 70 db isolation (also doubles as an in-line T/R switch with transmitters of less than 25 watts output), and the RP-2 for low noise VHF-UHF use with better than 40 db isolation from 50 to 450 megacycles. Neither needs tuning or creates harmonics which can cause TVI. Power for operation may be derived from transmitter or receiver. The RP-1 is contained in a 23/4"x 21/8"x15/8" minibox and the RP-2 in a 10"x2"x15/8" minibox; both are grey hammertone enameled. Connectors: N, BNC, UHF or RF Phono. Price: RP-1 $10.95, RP-2 $12.95. More information is available in brochure RP-1,2 free for the asking.*

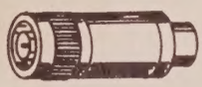

LP-1NM

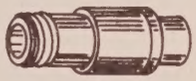

LP-1NF

MP-1NM

PRECISION COAXIAL TERMINATIONS

Two series of precision, 50 ohm, coaxial terminations are offered. The LP-1 series are capable of dissipating 1 watt and are useful for terminating test pieces, noise generators, directional couplers, and may be used for standards in VSWR bridges. VSWR of LP-1 series terminations is less than 1.05 from d-c to 1300 megacycles. The MP-1 series are designed for medium power; up to 12 watts continuous in 50 ohm coax without heatsink, and up to 25 watts with suitable heatsink. VSWR of MP-1 series terminations is less than 1.10 from d-c to 1300 megacycles. Connectors: type N only. To order suffix model number with M or F to indicate male or female; eg. LP-1NF. Price: LP-1 series $12.00 each, MP-1 series $22.50 each, both postpaid.* Ask for brochure PTC for more information.

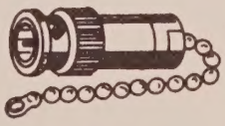

BNC TERMINATIONS

Consist of a one-half watt, 5% carbon resistor enclosed in a carefully machined housing which is silver plated to ensure good RF conductivity. They are supplied with a 75 ohm resistor installed and a 51 ohm resistor to replace it for use in 50 ohm systems. The chain is 5½" in length. Brand new surplus. $1.75 each, postpaid.*

SILVER PLATED WIRE AND TUBING

Of pure copper, plated with 0.5 mil of high conductivity silver, they offer low loss for critical tuned circuits in converters, pre-amplifiers, transmitters,etc. Sizes are #16, 14, 12, and 1/8" OD tubing. Maximum length in one piece is 25 feet. Price for any size is 40¢ per foot. Minimum order $2.00.*

* Maryland residents include 3% state sales tax with order.

Radiation Devices Co.

PO Box 8450 Baltimore, Md. 21234

Moonbounce Newsletter

by Victor A. Michael, W3SDZ
Box 345, Milton, Penna.

With winter ready to set in here in the Northern Hemisphere, most of the moonbounce activity has been reduced to talking and planning for next spring. There is one exception to the rule, K2UYH/2. Al and his moonbounce crew have obtained permission to use a commercial sixty-foot dish as a military research facility in New Jersey. They expect to be able to use the dish on weekends on a regular basis. At present, they are planning to use it about one weekend per month for moonbounce tests on 432 MC. Their first tests were made on November 29. There were some problems (as is to be expected on a first try of this nature), but they managed to hear their own echoes and were heard on a marginal basis by W4HHK. Paul heard their carrier just above the noise with his 18-foot dish. They are now in the process of working out some of their problems, and hope for the next try to come in the first part of January. Since operation time is usually not too definite until close to schedule time, I suggest you write to Al if you are interested. He plans to send postal cards just before each schedule.

At present, the K2UYH/2 operation is on 432 MC with an efficient 432 transmitter. The two meter exciter drives a 4CX300 tripler, which drives an RCA 7650 amplifier. Receiver is a Parks transistorized front end converter into a Collins R390. Plans are to have a paramp in front of the converter for the next tests. The antenna has both a 432 feed, and a feed that will work on two meters. If some interest can be demonstrated for two meter schedules, Al can make some two meter tests. Again, if you are interested, write to K2UYH. The address: Allan Katz, E. E. Department, Rutgers University, New Brunswick, New Jersey.

The activities here at W3SDZ have been rather limited due to a rather serious encounter with a virus infection. We spent two weeks in bed and another two weeks getting back to normal stride. This prevented our participation in the first K2UYH tests. Things are starting to get caught up, so after the holiday season, we expect to be ready for at least "weather permitting" type schedules.

Editor's Note: Vic promised an article on Parabolic Antenna Construction this month, and he submitted it as a part of his column. However we ran out of space and will therefore include it in next month's magazine which we HOPE to get out toward the first of the month.

OPEN BANDS column as of this last minute writing has not arrived so will have to go in next month.

VHFER magazine is published monthly by Parks Electronics Lab., Rt 2, Box 35, Beaverton, Ore. 97005. Subscription rates: U.S. & possessions $2 per year, others $3 per year. Second class postage paid at Beaverton, Oregon

PHASE LOCKED LOOPS, PROMISE OR PRACTICALLITY

by Hank Olson, W6GXN*

There is something really fascinating about a device that, when tuned to a signal, "locks-on" and tracks the signal's variations in frequency as the propagation medium changes. But the fascination has hypnotized many engineers and amateurs far beyond any reasonable degree, to the point where any phase-locked receiver has an air of holiness about it in their eyes. In fact a phase-lock system is just another servo-mechanism and really ought to cause little more interest than the pneumatic servo (designed in the 1920's) that keeps the paper piano roll centered on a player piano, or a watt governor on an old steam engine.

To see just what a phase-locked loop really is, let's take a look at how it works; then we can discuss what it will and won't do.

The phase-locked loop is one of a class of detectors in which the signal being detected is of the same frequency and in a fixed phase relation with a locally generated signal. The methods of maintaining phase lock between signal and locally-generated demodulation voltage vary, and so there are several names by which such receivers are known. The Homodyne is the earliest name by which a phase-locked detector was known, and this one has been around since 1925.[1] This and succeeding similar detectors called "Synchrodynes" achieved phase-lock by injecting the signal into the local oscillation source. However, in the 1940 to 1950 period it was shown that a phase-detector and reactance tube could be used in a servo system to accomplish the same phase control as had previously been accomplished by injection locking.[2]

The elementary phase-locked loop shown in Figure 1 is composed of components familiar to most hams. The "phase-detector" is a device for multiplying two voltages together similar to the popular S. S. B. product detector. The "lo-pass filter" is the simplest type around: an "R-C". And the voltage-controlled-oscillator (V.C.O.) is what we often encounter in our F.M. broadcast receivers — an oscillator with a varicap or reactance tube across its tuned circuit.

From this elementary circuit, the variations and elaborations go in every direction, and we shall look at some of these, but first let's see what we have basically.

The phase-detector (being a product detector) multiplies a (strong) local signal by a (relatively weak) signal that we wish to detect. The fact that the local signal is the larger is only to assure that the device performs as a true multiplier, and is incidental to the explanation.

Consider the multiplication together of two signals, by our phase-detector, of the same frequency but in three different phase relationships. We can do this graphically as in Figure 2. Notice that the product of the signals "in-phase" produces an average positive value, and that the product of the signals "out-of-phase" produces an average negative value. But when the signals are in "quadrature" (90° out of phase with each other) the average output is zero since the product is simply a sine wave of twice that of either input frequency. Thus the output of a true multiplier is very reminiscent of the characteristic of our old friend the F.M. discriminator, but with 0° and 180° being the extremes, and 90° the center; see Figure 3.

In Figure 4, if the V.C.O. happens to have its output voltage in quadrature (90° out of phase) with the incoming signal, the output of the phase detector will be zero, and no correction will be applied (through the low-pass filter) to change the phase of the V.C.O. One will also note that a phase-detector characteristic of identical shape but opposite in slope exists for the 0° to -180° phase region. This makes the system really wonderful. Regardless of whether a correction voltage applied to the V.C.O. makes its frequency go up or go down, the system will still work properly. This is due to the ability of the phase detector to supply either slope as required for the sense of the V.C.O. This may seem odd to those familiar with A.F.C. circuits, where a reversed discriminator causes the oscillator to "push itself away" from any signal it approaches, but it really works that way!

In order that all the information be extracted from the incoming signal, a second phase detector is usually added with a 90° phase shift network, so that now we also multiply our two signals in-phase to produce amplitude information output. Actually, whether the two are in-phase or 180° out-of-phase is unimportant; it's only a question of whether we want our amplitude output positive or negative.

The basic phase-locked loop described above lends itself to many modifications as necessitated by convenience. Figure 5 shows how a particular V.H.F. converter, communication receiver combination could be made to operate as a phase-locking system.

In such a system, there is a progressive narrowing of the bandwidth as the signal goes through the receiver. At the antenna, the bandwidth (as restricted by the antenna's resonances) may be many megacycles. After the V.H.F. Converter this may only be several hundred kilocycles. And at the end of the communication-receiver I.F. amplifier the bandwidth is probably only several kilocycles. At this point we extract the pre-detected I.F. signal and put it into our phase-locked loop, which once again narrows the bandwidth. The effective bandwidth at the "phase-out" is twice the Lo-Pass filter's cutoff frequency. That is, if the low pass filter were as in Figure 6, consisting of 0.1 megohm and 1 mfd. it has a time constant of $(0.1 \times 10^6) \times (1 \times 10^{-6})$ or 0.1 sec. Therefore, its low pass bandwidth is 1/2 times $\frac{1}{0.1 \text{ sec}}$ or about 1.6 cycles per sec., and an equivalent I.F. bandwidth of 3.2 cps. This may sound like an awfully small bandwidth, but a number of systems are in commercial use which use even smaller bandwidths. Since the "loop-bandwidth" can be well above one-to-one even though the signal, as it comes out at the end of the communication receiver I.F., was well down in the noise. Also, the signal-to-noise ratio at the "amplitude-out" is the same as that in the I.F. output, since in Figure 4 no low-pass filter in the amplitude channel was shown. Any convenient low pass filter may be used after this (quadrature) detector to narrow the bandwidth of this channel, since it is not part of a servo loop and stability criteria need not be observed.

*3780 Starr King Circle
Palo Alto, California

The phase-lock system shown in Figure 5 uses A.P.C. (automatic phase control) of the oscillator operating at the frequency of the I.F., but any of the three oscillators in the system could be made the V.C.O. Figures 7 and 8 show the same system as modified to use A.P.C. of the communication-receiver local oscillator or the V.H.F. converter crystal local oscillator, respectively. The one thing that must be remembered is that regardless of which oscillator in the system is made the V.C.O., the others must be made stable to a degree such that they do not drift beyond the limits of loop bandwidth. This usually means that crystal control is used on any oscillator that is not to be A.P.C.'ed or manually adjusted. In a system wherein there are a large number of conversions, often all frequencies but the V.C.O. injection frequency are synthesized from a single very stable crystal oscillator. One particularly satisfactory configuration is to make the V.C.O. also the manually adjustable oscillator (for tuning), and crystal-control all the others.

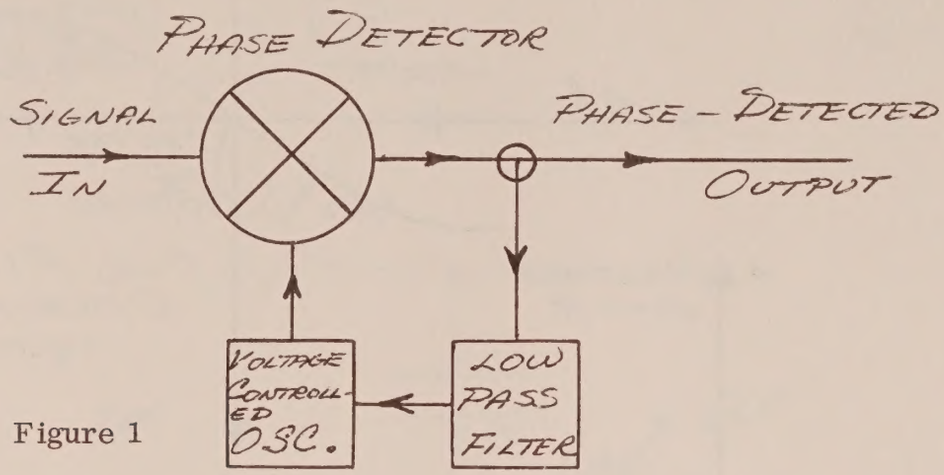

Figure 1

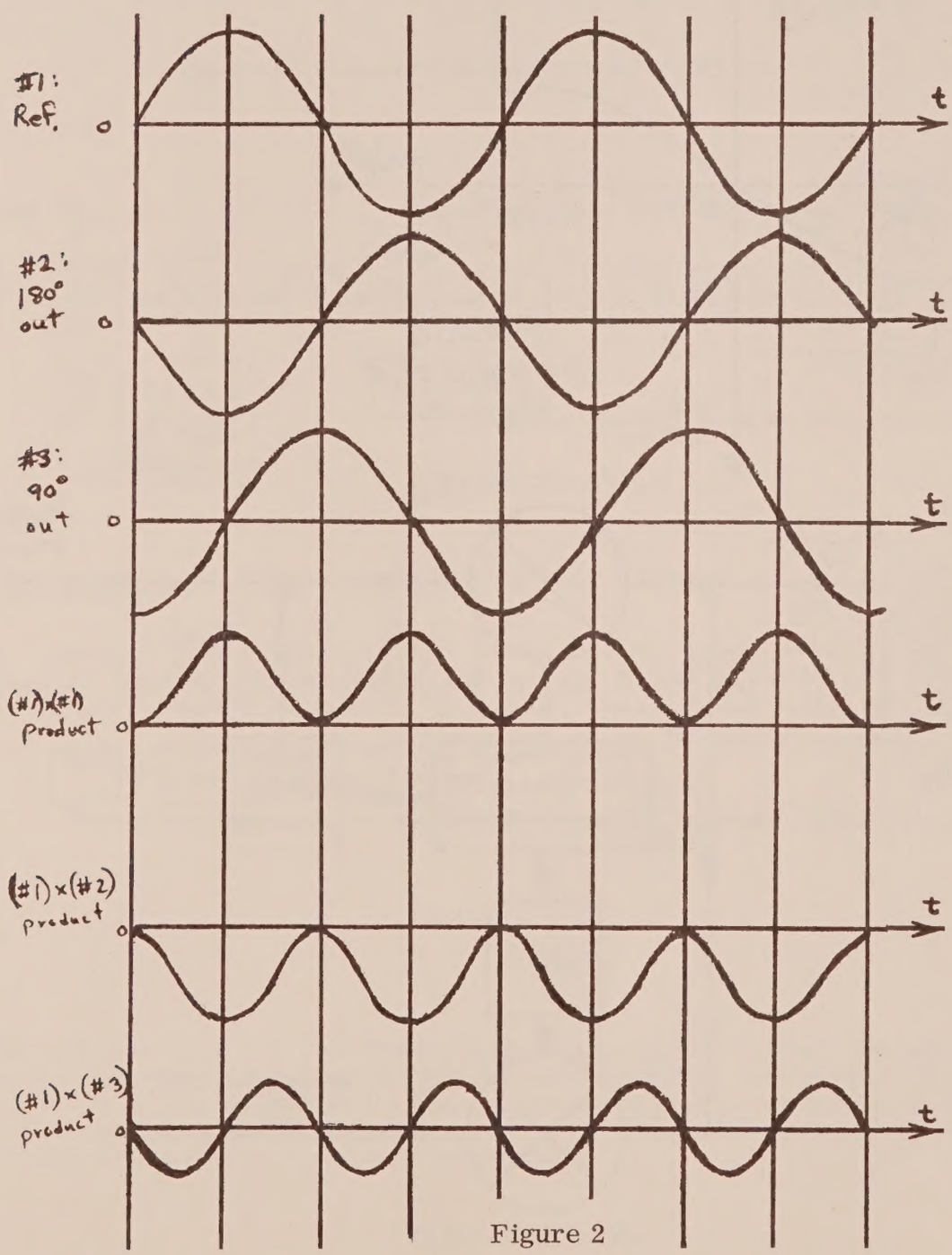

Figure 2

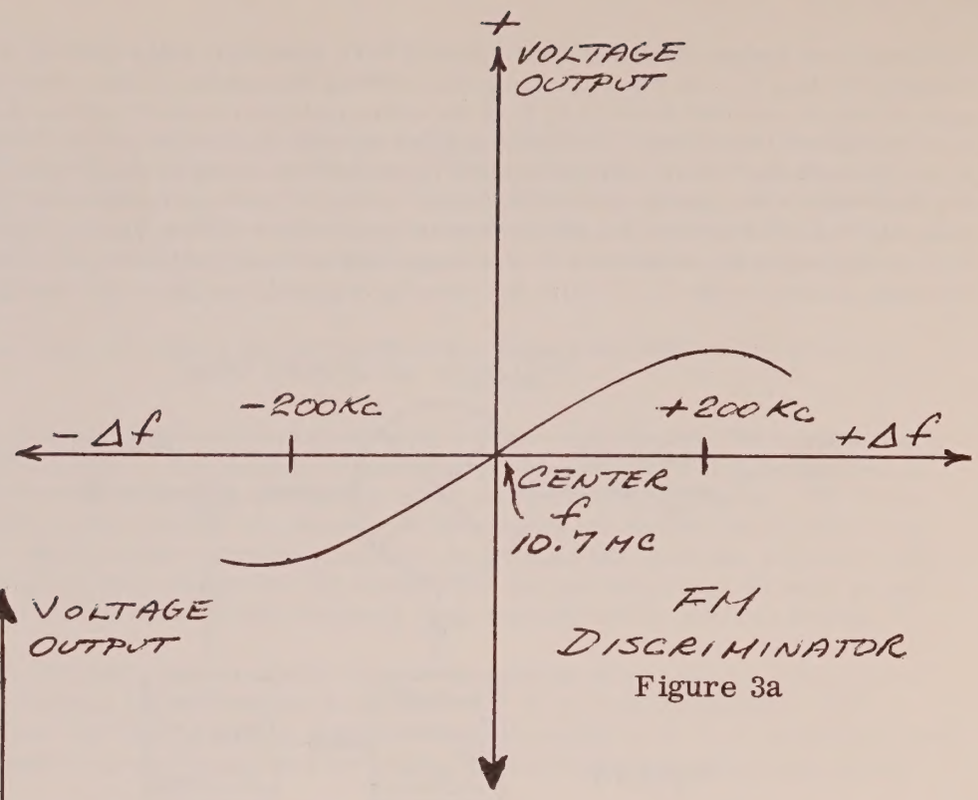

FM DISCRIMINATOR
Figure 3a

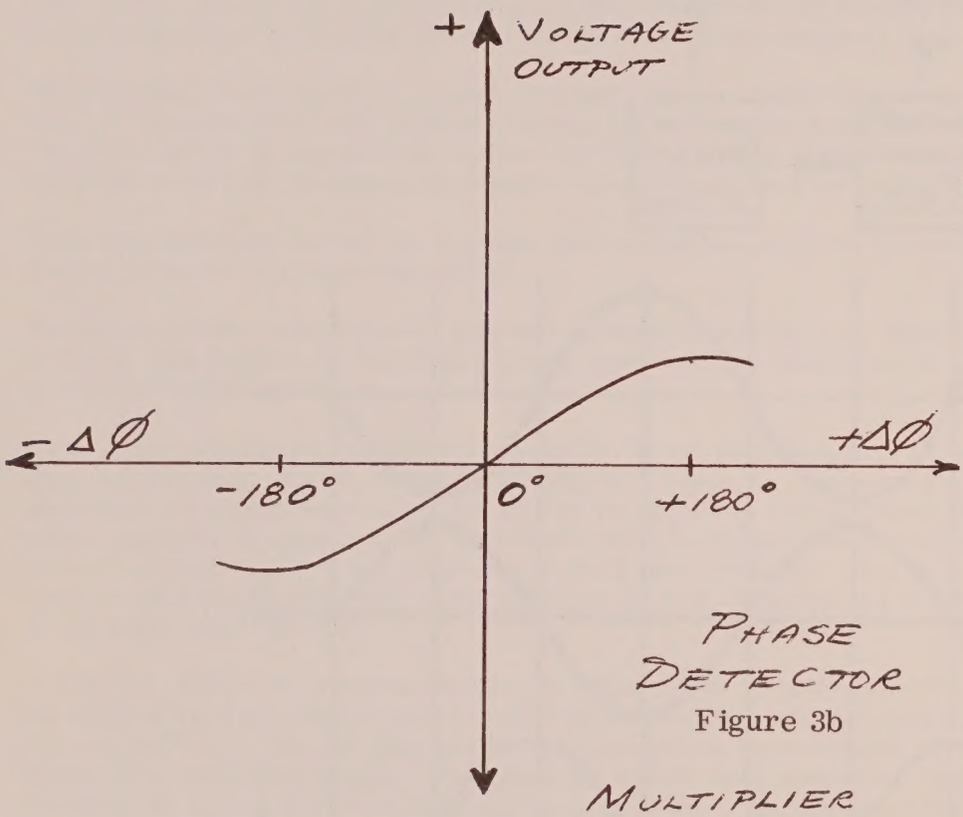

PHASE DETECTOR
Figure 3b

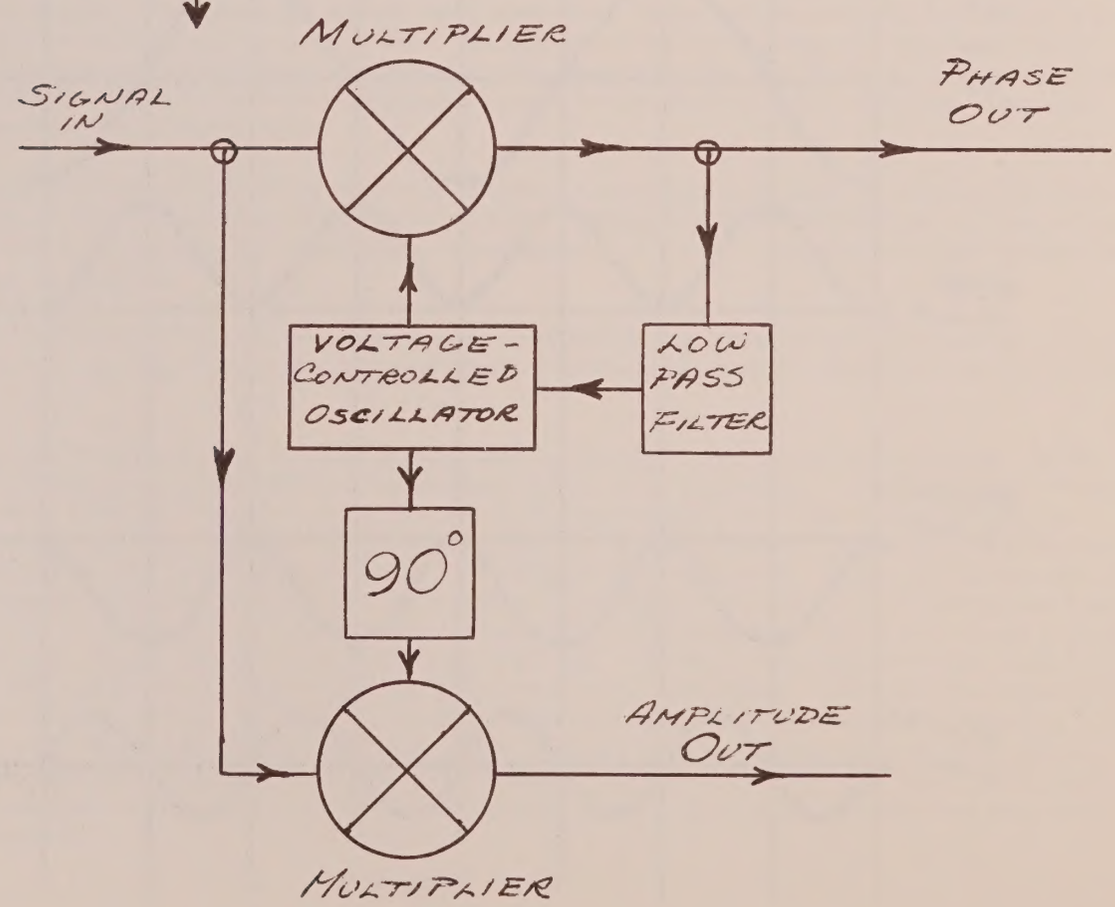

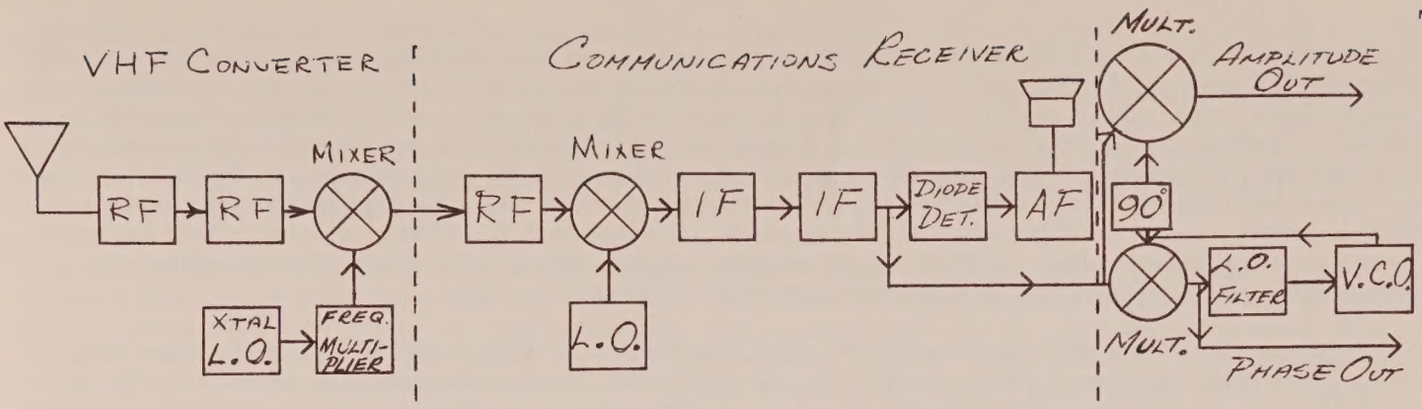

Figure 5

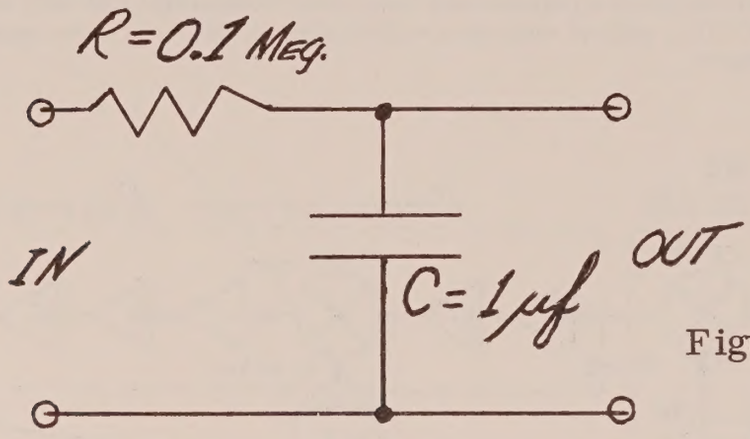

Figure 6

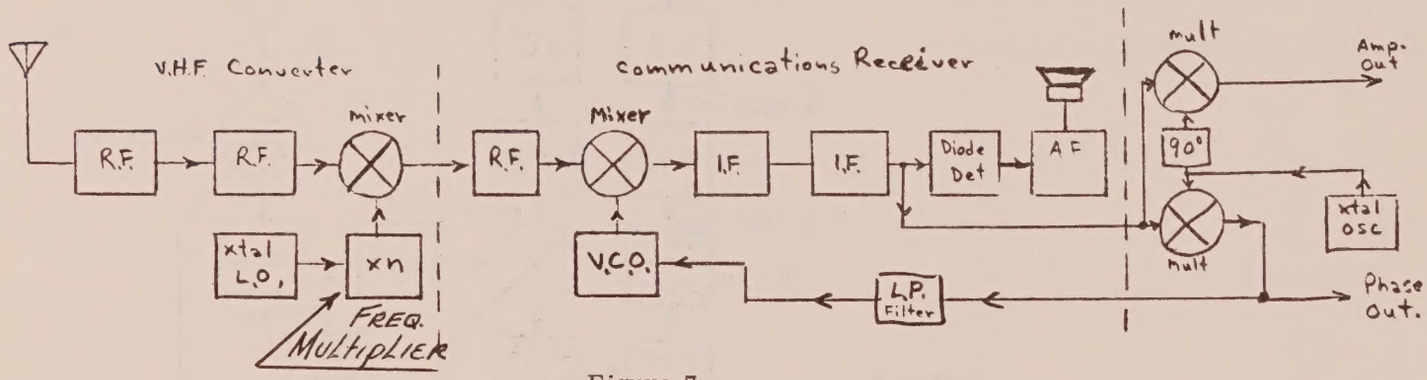

Figure 7

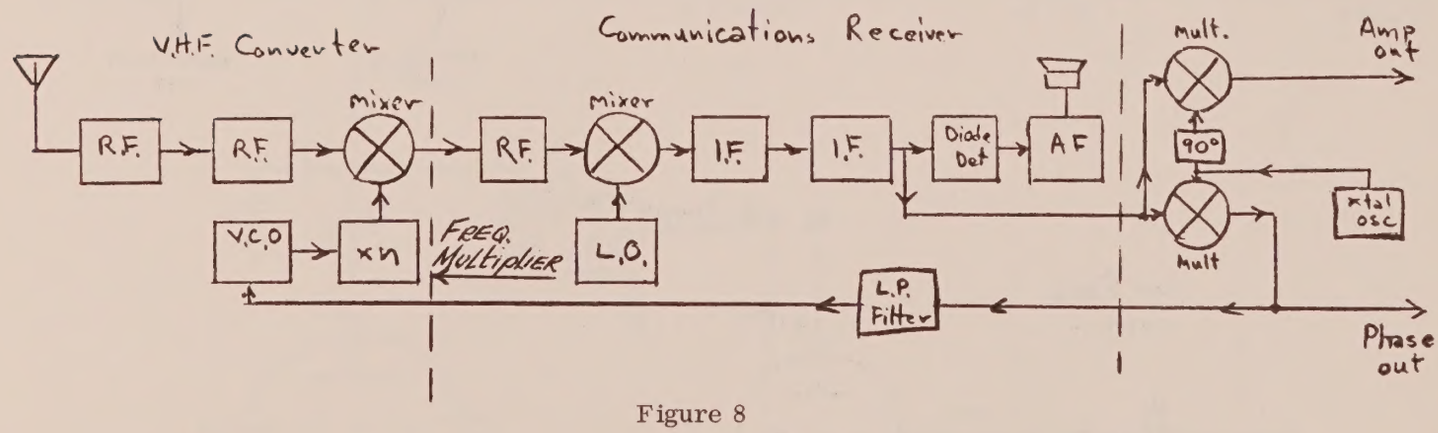

Figure 8

Such a system is shown in Figure 9, as it was built for satellite reception in our own shack. The phase detectors used in this system were direct copies of those modified from "Microlock" by W6VZA, and a standard Collins P.T.O. was converted to a V.C.O. by the simple addition of a varicap.[3] The system would not only lock on -140 dbm signals at 216 Mc, but the communication receiver (without the converter ahead of it) would nicely lock on to WWV at 20 Mc. Note that two of the three oscillators in the system are crystal-controlled.

A careful look at Figure 9 will reveal that a limiter has been added in the phase-detecting channel so that the loop is not amplitude sensitive. This is standard practice in phase-locked loops and was omitted in the previous explanation for simplification. Also, note the cathode-follower after the low-pass filter, which is a great convenience in several respects. It allows the low pass filter to work into a nearly infinite impedance, as it must if it is to function properly. Secondly, since most phase detectors have an output level of zero volts for a 90° phase relationship, the cathode follower provides a small positive voltage output for varicap bias when its input is at zero. See Figure 10 for the cathode follower levels; note that its plate voltage must be regulated, as variations in E_b will show up at the cathode and hence move the varicap voltage agound. In Figure 10, R3 provides a small variation in the varicap bias that is handy for adjustments. (It also changes loop gain, so adjustment range should be kept small.)

The small resistor R2 is a most important feature, which also was left out of the initial description of a phase-locked-loop. It is a rather small resistance compared to R1 and modifies the low-pass characteristic, as shown in Figure 11. As can be seen, the presence of R2 means that at high frequencies, where C is essentially a short, the filter is a voltage divider with an output to input voltage ratio of $\frac{R2}{R1 + R2}$. The presence of this small resistance usually will make the difference between success and failure of a phase-locked loop. Many designs that will work with no low-pass filter between phase detector and V.C.O., will not work when an R-C filter is added. In servo language this is known as "proportional plus linear" control.

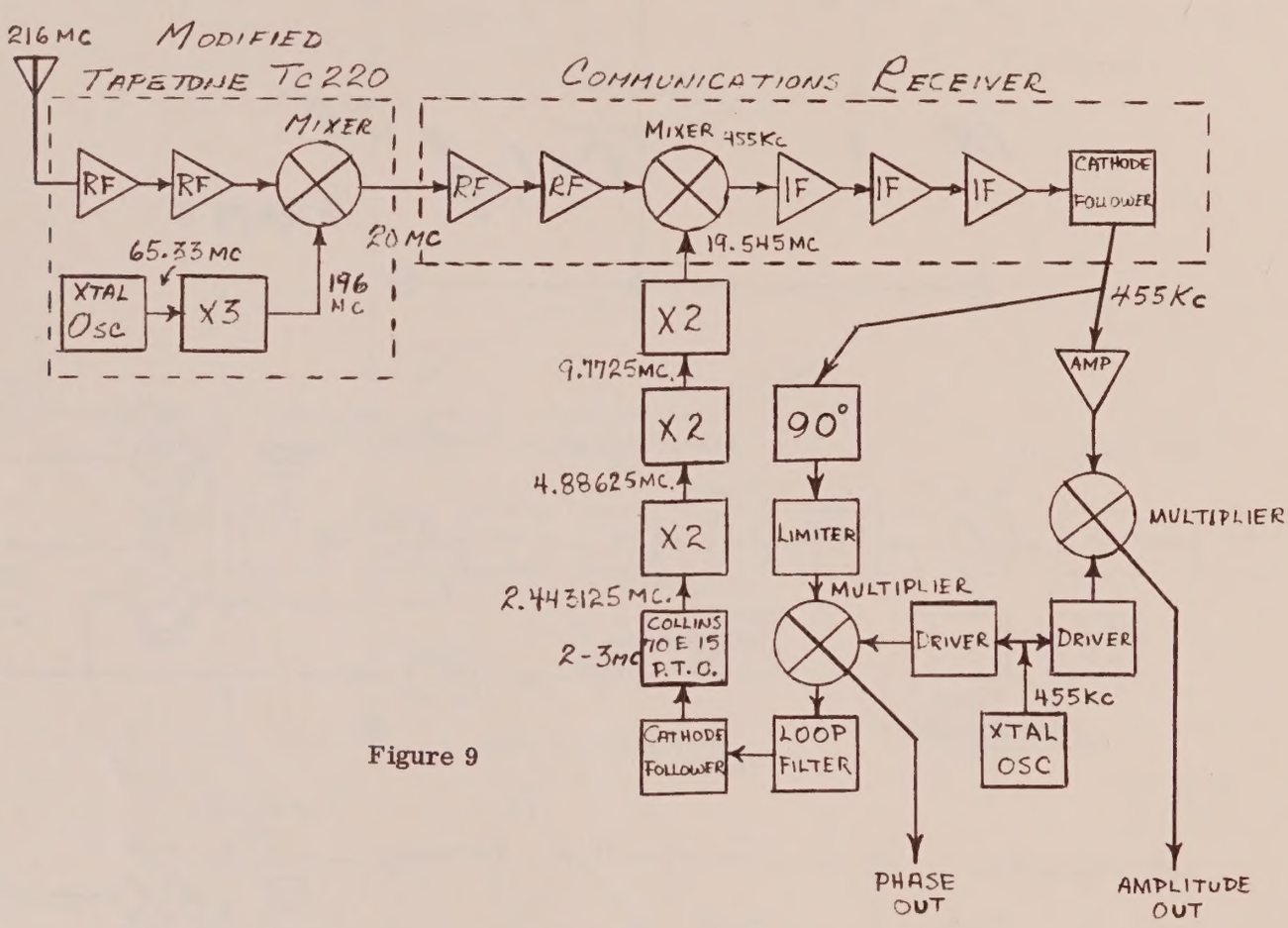

Figure 9

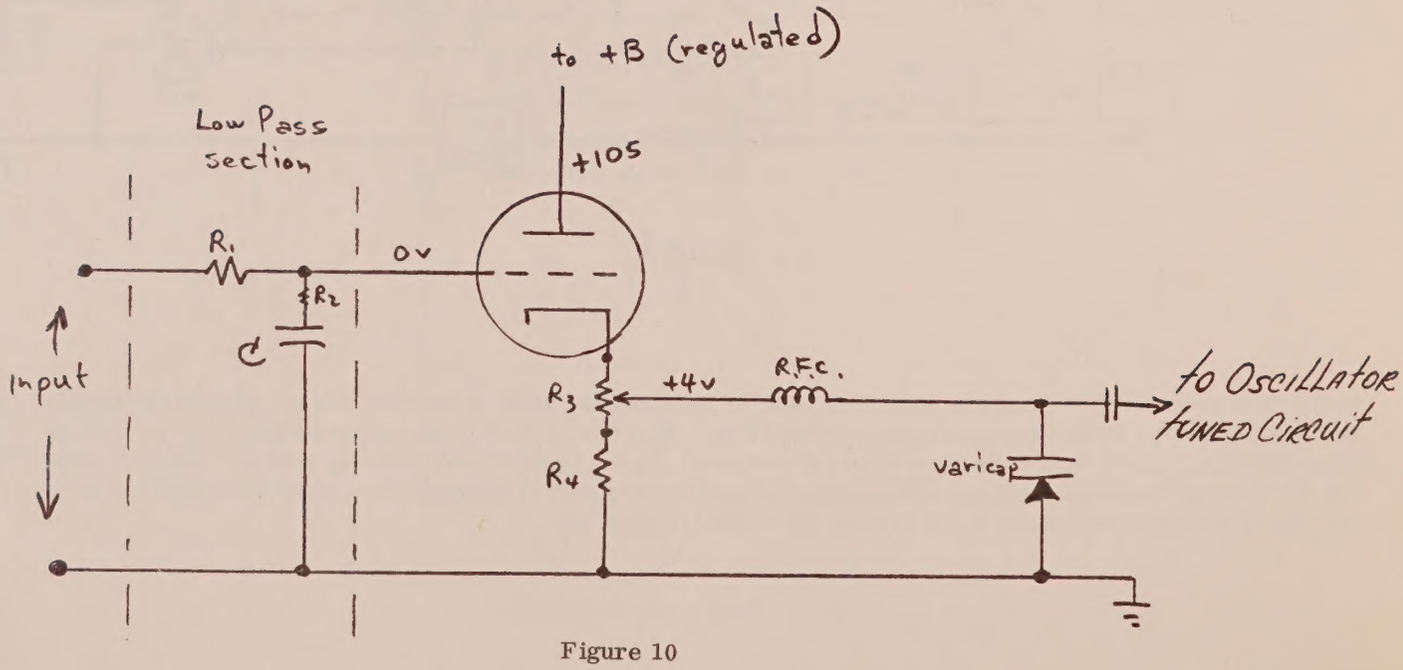

Figure 10

One other point of potential trouble in the phase-locked loop is the method of controlling the frequency of the V.C.O. If one puts a varicap in an oscillator circuit one must be sure that the oscillator R.F. voltage across the varicap is smaller than the varicap back bias. Otherwise, the varicap (a diode) can be driven into conduction, self-biasing sets in, and troubles result. A method of avoiding this is to use two varicaps as in Figure 12. The particular V.C.O. in Figure 12 is a crystal type used where only small amounts of shift are desired (nearly all the applications where phase locked loops are used). In this circuit the varicaps modify the series-mode resonance of the crystal, much as the crystal V.F.O. operated in a recent article by Tilton. [4]

The phase-locked loop is very attractive as a weak signal detector because it gives the equivalent of a narrow pre-detection bandwidth even at a fairly high I.F. frequency. This means, for instance, that a 100 cps bandwidth system can be built whose lowest I.F. is say 7 Mc; making successive conversions to lower I.F.'s unnecessary. However, it has one rather annoying feature, it stays locked on a signal over a greater range in frequency than it will acquire lock to a signal. This can be a bit disturbing on radiotelegraph signals because if the signal is near the outer limit of locking (having drifted say due to doppler change) during a "dash", the system won't relock on the next "dash" or "dot".

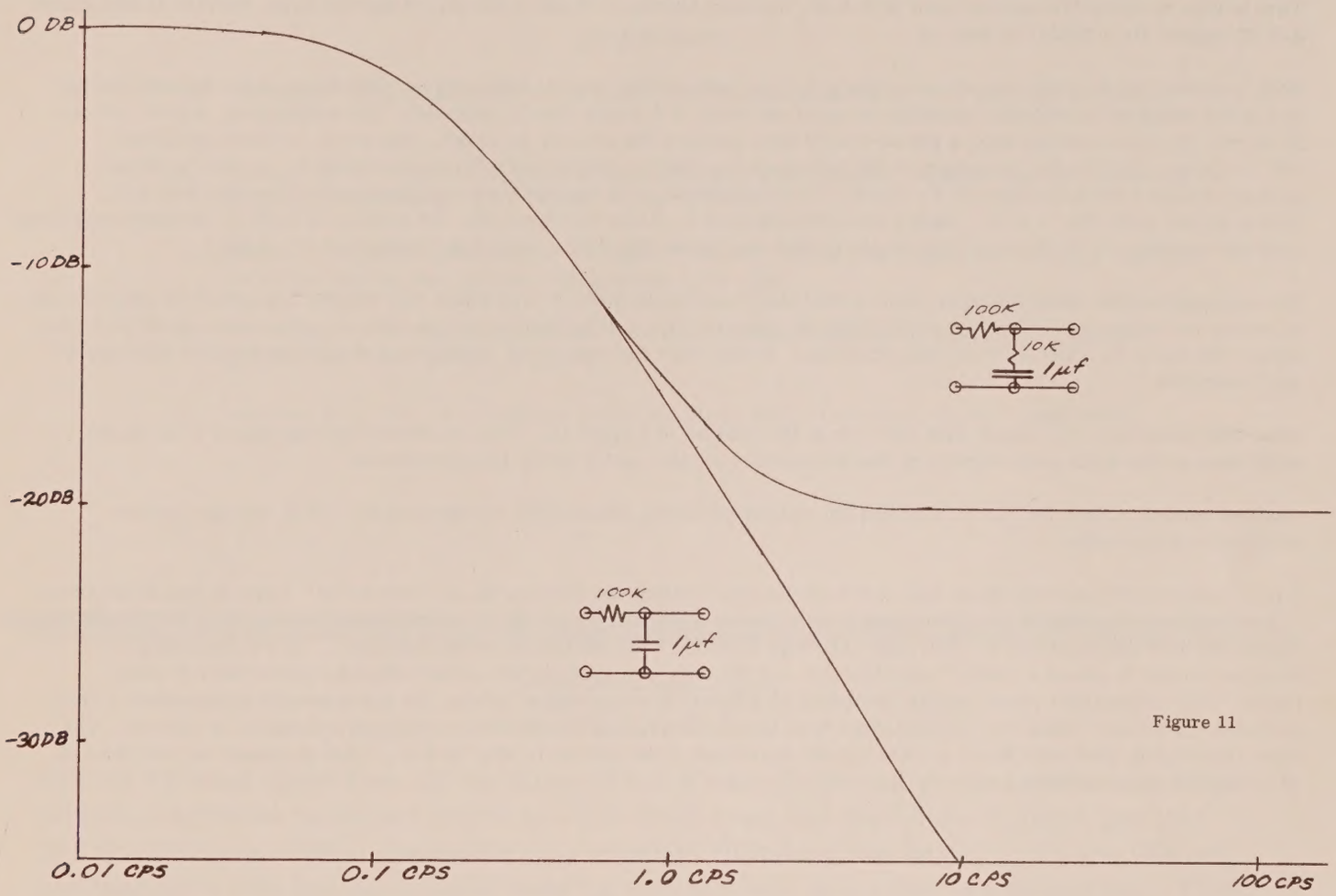

Figure 11

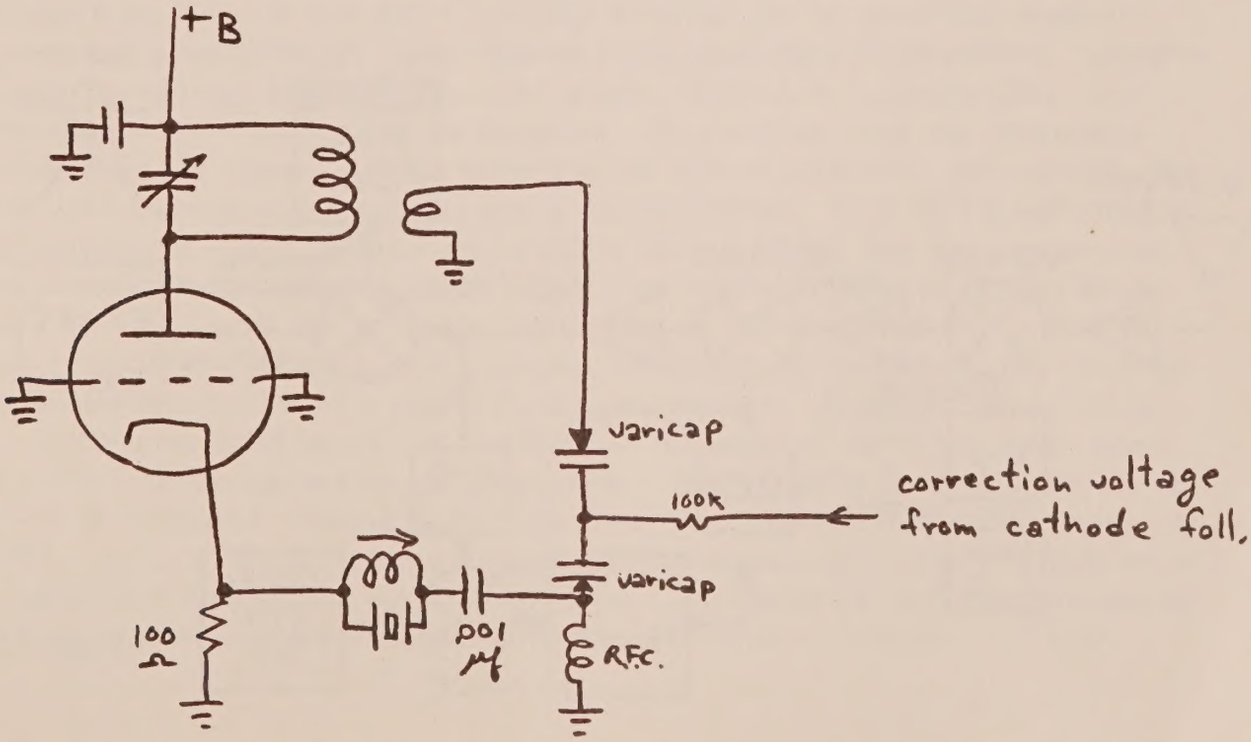

Figure 12

This inequality of hold-in range to pull-in range can be corrected by the "polylock" modification as described by Burhans[5] However, even when the pull-in and hold-in ranges are equal, it would be preferable if the loop didn't have to exert itself relocking on each dot and dash of Morse code as signal arrived at the receiver. This is simply because the equivalent narrow predetection-bandwidth of the phase-locked-loop is not realized until phase-locking action is established.

The only two amateur articles that this author knows of which actually describe how to build phase-locked-loop circuits are oriented toward reception of the constant-tone signals from satellites. [3,5] Both of these articles are worth-while and should be consulted if you're interested in satellite tracking or more background on phase-locked loops.

What, then, can be done to keep the loop locked up all the time so that the benefits of its narrow bandwidth can be realized? One solution might be to send a pilot carrier near the information channel whose only purpose is to supply phase information to the receiver. Such a system is employed in commercial F.M. Stereo Multiplex quite successfully. This is also in effect the method used in S.S.B. Reduced Carrier, where a portion of the old A.M. carrier is left in the S.S.B. signal for a YRS-1 to lock on.

Such a system might make use of an ordinary S.S.B. transmitter with enough carrier reinserted (say, by unbalancing one of the balanced modulators slightly) to equal the level of a single tone's sideband. The single tone, say at 500 cps, is keyed. At the receiving end, a phase-locked loop locks to the carrier as usual. However, a second oscillator 500 cps removed from the frequency of the reference oscillator, which feeds the phase detector, is used to drive a product detector from the same I.F. signal. In this system, it is easiest if an oscillator other than the last (I.F. frequency) is made the V.C.O. Such a receiving system is shown in Figure 13. Of course, if L.S.B. transmission were used the auxiliary B.F.O. frequency would be 500 cps below 455.0 Kc. (454.5 Kc instead of 455.5 Kc.)

The assumption that underlies this mode is that the propagation medium will affect two signals separated by only 500 cps in nearly the same way. That is, a 432.0000 Mc spectral line will be doppler-shifted on an earth-moon-earth path very nearly the same as a 432.0005 Mc spectral line. In any case the difference in dopplers should be smaller than our 10 cps bandwidth.

Note that there is no 90° phase shift network in the system in Figure 13. This is simply because there is no phase coherence between the pilot signal and the information signal, and it would be superfluous.

Another method of keeping the loop locked up, yet transmitting information simultaneously, is to use slow phase modulation telegraphy.

Every first order phase-tracking loop (we have thus far limited our discussion to "first order" loops in which the servo error voltage is proportional to frequency error) has an ability to stay locked to a signal so long as: 1. The signal stays within the hold-in range and 2. The rate of change of phase does not exceed some factor α . If we then assign to a positive change in phase a "make" significance, and arrange our transmitter so that when we press the key down ("make") the transmitter phase slowly ramps up to a fixed "more positive" phase, we can transmit information. This will show up in the "phase out" part (Figure 4) at the receiver, and the quadrature channel can again be deleted. The slow ramping up (and back down) in phase is all important if the loop is to stay locked. This is simply so that the rate of change of phase never exceeds α .

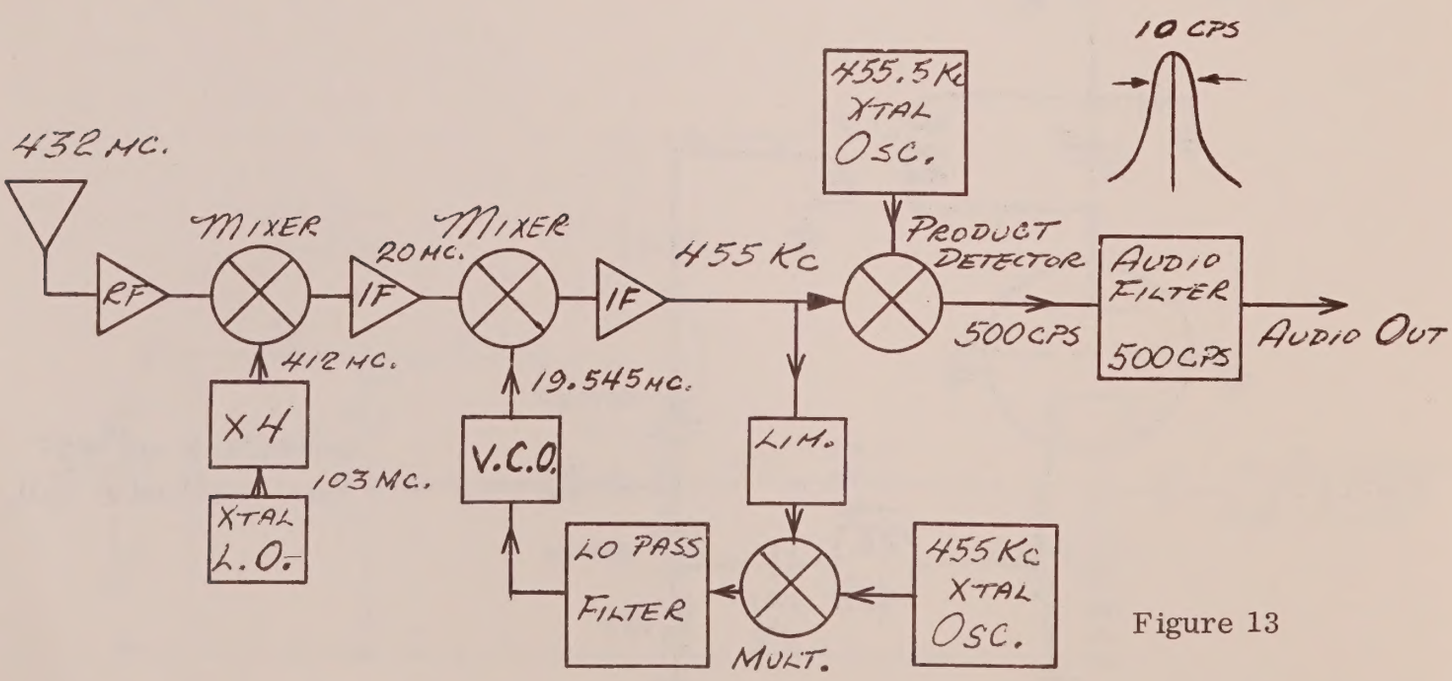

Figure 13

Both of the above methods of fully utilizing the inherently narrow bandwidths of phase locked loops are in the category of special purpose systems. That is, the two stations trying to make QSO are matched in modes in a rather special way. This prospect may seem not compatible with ham radio, but it is akin to V.H.F. - DX scheduling wherein many other details (time, sequence of calls, exact frequency, and whether telegraph, L.S.B. or U.S.B. is to be used) are exchanged prior to the actual attempt.

Implicit in all the above discussion of phase locked loops is that all the oscillators in the system must be quite stable (including the V.C.O.) with time. If they are not stable, then the locked loop has to "work harder" to keep up with these non-productive variations in phase and therefore we reducd the received information rate of which the system is capable. In short, the phase-locked loop is a swell gadget, but it's not meant to "take up all the slop" in a poorly designed system.

BIBLIOGRAPHY

1. Colebrook, "The Homodyne", Wireless World and Radio Review, Vol. 13, Feb. 20, 1924, p. 645.

2. Tucker, D. G. "The History of the Homodyne and Synchrodyne", Journal British Institution of Radio Engineering, Vol. 14, No. 4, April 1954.

3. Amateur Microlock Handbook by Charles R. Butler, K6ZAT and Henry L. Richter, W6VZA, published for the San Gabriel Valley Radio Club, Inc.

4. Tilton, E., "A Stable, but Variable Frequency-Control System for the V.H.F. Bands" Q.S.T. July 1963, p. 11.

5. Burhans, R., "An I.F. Tracking Filter for Weak Signal Reception" A.S.T. September, 1964, p. 11.

OSCAR IV IS UP

OSCAR IV went up on Dec. 21 as planned but it wasn't ejected as planned because the missile engine or whatever didn't fire the third time and therefore it didn't get into the synchronous orbit. Confusion was rampant following the launch and even OSCAR headquarters was having trouble knowing where it was and what was happening. First contact through it we know of was W6YK working W4AWS. Its for sure that contacts were scarce as hen's teeth though many stations were heard thru the repeater. If you're one of the ones not hearing anything you aren't alone. K6HAA in southern Calif. reported signals about S-4 coming thru the repeater. He could not hear the repeater's receiver noise, just the signals and the beacon at ten minute intervals. His antenna is a 64 element extended-expanded colinear (as in CQ Handbook). Both W6YK and K6HAA used Parks converters. So did Parks but he didn't hear anything, nor did anyone else in this area I know of. Not knowing where to point and when to listen (at this writing) is a heck of a handicap. OSCAR project's frequencies on SSB are 3935, 7235, 14235 and 21335 at 8 PM PST. Chance to ask questions follows the broadcasts. The satellite is within range for about 4 hrs at a time, maximum I believe. Expected life is one to two years. Orbit is about 10 hours. It is always to the south of the U.S., never coming farther north than 26 degrees above the equator. Highest point is 18,200 and lowest 106 miles---very elliptical. Output center frequency is about 431.940 and the beacon is about 431.925---quite a deviation from original figures apparently due to propagation or doppler or something else beyond my understanding. Apologies for any misinformation. Listen to Project Oscar reports for more accurate and complete details. K7AAD

A TRANSISTOR PREAMPLIFIER FOR 432 MC.

by R. L. Measures, K6OKC*

The transistor preamplifier is here to stay, in spite of the r. f. burnout problem (which can be whipped.) Especially now with Oscar IV to go into orbit shortly, a low-noise preamp will be necessary to permit copy of its weak 432 signal.

This preamplifier uses the Amperex 2N3399 which is relatively inexpensive ($2.55 singles from Newark, Chicago). While there are other transistors available now which perform as well (or a little better) there may be stability problems with some of them. The 2N3399 is a "proven performer." Other types you may get working are TI-X MO5, TI-400. The TI-400 is shielded but the TI-X MO5 isn't and may be a little wild.

One stage of preamplification is adequate for a good crystal mixer followed by a low noise 28 Mc. preamp. A small improvement can be secured by using two stages of r.f. amplification at 432, but the difference is less than 1 db. using a 1N21C mixer. You can't hear 1db.

WB6LLT made the converter described in the October VHFER and used one r.f. stage ahead of it. It is not notably worse than my 2 r.f. stage job. In fact the difference by ear is insignificant on a weak cw signal.

Sometimes instability is encountered with 2 r.f. stages. This can be caused by using a source impedance other than 50 ohms. If you use other than 50 ohm coax feed line, it might be wise to provide an alternative output after one stage of r.f. in case you have problems with two. A single stage preamp at the antenna is probably a good route to go. Keep in mind that too large a dose of r.f. on the transistor will cause the noise figure of the preamp to deteriorate even though the transistor doesn't burn out. It pays to have some sort of testing method to let you make sure everything is as it should be from time to time.

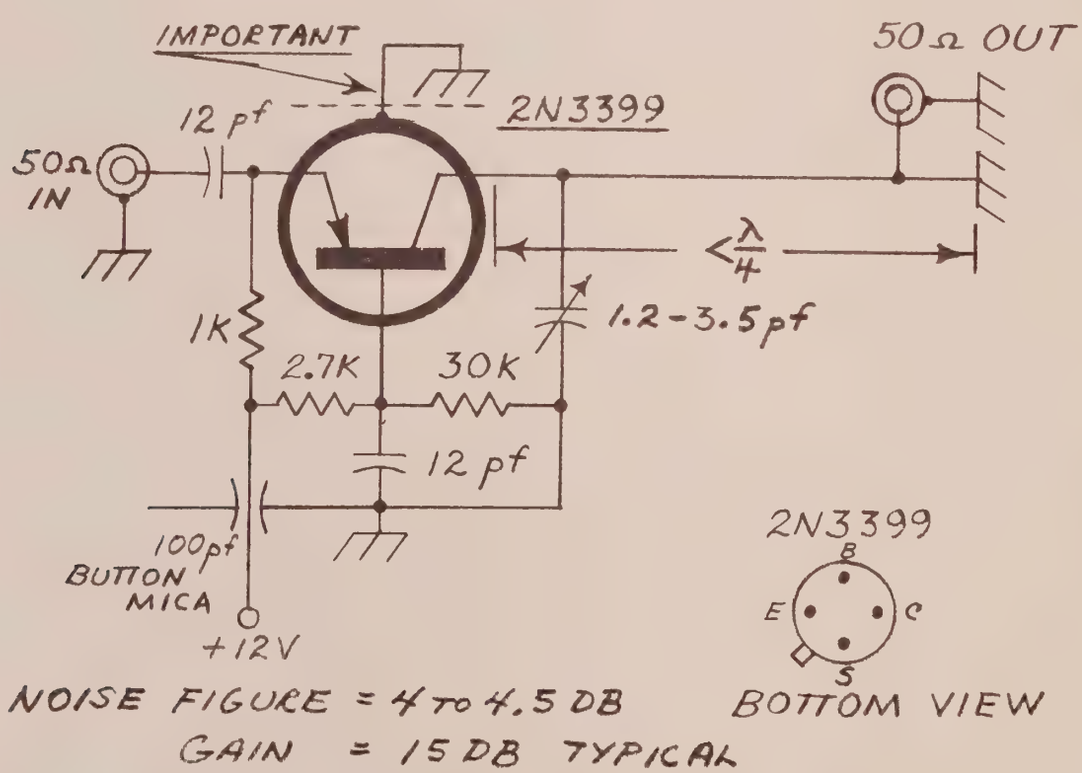

2N3399 PREAMP FOR 432 MC.

See Additional Diagrams on Front Cover.

*1121 Glenwood
Oxnard, California

TRANSISTORS AS I. F. PREAMPLIFIERS

by Henry Cross, W1OOP*

A sample I. F. preamplifier for 30 Mc. was constructed using three stages, unneutralized, of grounded-emitter amplification. For NPN testing the second and third stages were Fairchild SE-3001. For PNP testing Philco type 2N1747 were used. 12 volts was used on NPNs and 10-1/2 V (poled the other way) for PNP tests. The gain of this unit was sufficient to run directly into a HP340B automatic noise figure meter. The noise source was an HP345B, set up at 400 ohms in all cases. There was no transformation between the noise source and the base of the first stage, but there was a parallel-resonant tuned circuit (about 30 pf of tuning capacitance total) which (when it was tuned) seemed to have a small effect on noise figure. Collector current was adjustable. Bandwidth was several MC/s.

The data, somewhat digested, is given in table 1. Fig. 1 shows the amplifier. There was some trouble with instability in the amplifier for certain conditions of tuning, which were not close to the conditions for best noise figure.

Conclusions: Transistors similar to type 2N2857 can give good noise figures in IF pre-amplifiers, although the variation at 30 mc in a type whose noise figure is controlled at 450 mc is more than 1 db, leading to a considerable variation in total NF for the crystal mixer receiver.

Also: the better mesa transistors seem quieter at medium to ultra-high frequencies, and may be preferred for some applications where temperature variations don't matter too much, but SOME of the silicon transistors are as quiet as the best third of the mesas.

Transistors as I. F. Preamps

Table 1 Condensed Data

Mfr.	Type	Number Tested	Ave. NF at 220 mc	NF at 30 mc (R_s = 400) Average	Best	Cost
KMC	2N2857	2	1.7 db	1.05	1.0	$18
RCA	2N2857	10	2.53 (2.0 best)	1.54	1.2 (worst 2.0)	
RCA	2N3478	8	2.31	1.26	1.0	$1.90
KMC	2N2663	5	2.43	1.7	1.2	$8.00
FSC	2N3563	5	3.95	2.9	2.5	
			Mesa types:			
TI	2N2997	4	2.7	1.05	0.9	$3.63
TI	TI-400	3	3.1	1.2	1.1	$0.94
TI	TIXMO5	2	1.97	1.3	1.3	$0.62
Philco	T2028	1		2.0		
Philco	2N2398	1	4.0	2.0	Obsolete Types	

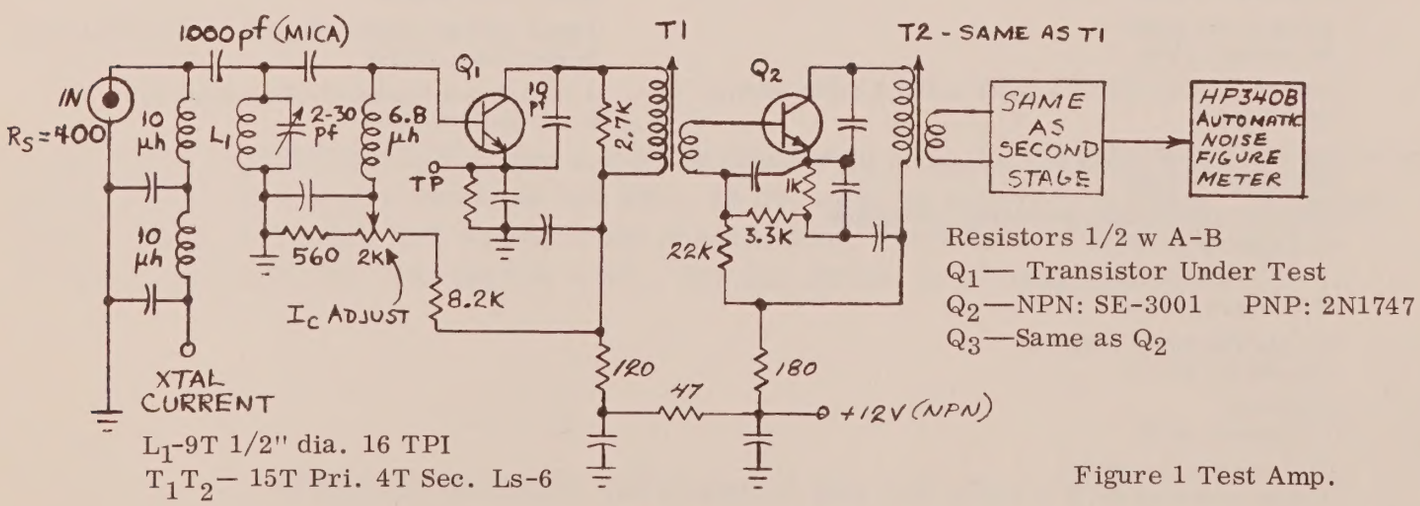

Figure 1 Test Amp.

*111 Bird's Hill Ave.
Needham, Mass. 02192

INDEX-1965

January—A STABLE OSCILLATOR FOR VHF-UHF
Ken Holladay, K6HCP, AFA6HCP

A LINEAR AMPLIFIER FOR 144 MCS.
Doug DeMaw, W8HHS

FUNDAMENTAL OVERLOAD
(A VHF TVI Problem)
Doug DeMaw, W8HHS

February-CAVITY FILTERS
Denton Nelson, W7UHF

125 W. ON 6 AND 2
(Poor Ham's "Final")
Doug DeMaw, W8HHS

A HANDFUL OF FACTS
Bill Roberts, W9HOV

March— MOONBOUNCE AUDIO FILTER
Victor A. Michael, W3SDZ

OSCAR III RESULTS
Loren Parks, K7AAD

April—— SIXTH ARMY R & D 432 MARS MEETING
Bruce Clark, K6JYO

THINGS THAT AIN'T SO
Fred Brown, W6HPH

HOW TO LISTEN FOR MOONBOUNCE SIGNALS
Bill Conkel, W6DNG

A REFERENCE DIPOLE FOR 2 METERS
Loren Parks, K7AAD

MORE IMPROVEMENT FOR VHF CONTESTS
D. L. Heller, W5NFJ-K3HNP

May—— A VHF-UHF MARKER GENERATOR
Mike Metcalf, W7UDM

MEASUREMENTS ON THE 2 METER TEN ELEMENT
"SKYBEAM" MADE BY "J" BEAM AERIALS, LTD.
Loren Parks, K7AAD

AN AUTOMATIC KEYER FOR METEOR SCATTER
"Skip" Freely, K6HMS

OBSTACLE GAIN AND THE VHF AMATEUR
George A. (Al) Olcott, K7ICW

TUNING VHF YAGIS BY THE FIELD STRENGTH METHOD
Loren Parks, K7AAD

June—— ANTENNA MEASUREMENTS WITH A MATCHED DETECTOR
Fred Brown, W6HPH

NOTES ON ANTENNA GAIN
BILL Roberts, W9HOV

A TIN CAN CONVERTER FOR 432 MC
Louis Hutton, K7YZZ

"IT CAN'T BE DONE"
Bill Graham, VE4GI

VIDICON OPTICAL FOCUS & LIGHT LEVEL REQUIREMENTS
Alfred Denson

July—— MOONBOUNCE REPORT
Tom Curran, W7UAB

NOTES ON CONVERTING MOTOROLA FM RADIOS
Jim McMechan, WØPFP

144 MC. WEAK SIGNAL SOURCE
"Skip" Freely, K6HMS

TIN CAN RESONANT CIRCUITS
Louis Hutton, K7YZZ

DX REPORT
Lew Munford, W8YIO

WEST COAST UHF REPORT
Al Olcott, K7ICW

August— LETS TALK ABOUT MOONBOUNCE
Loren Parks, K7AAD

A HIGH SENSITIVITY VHF FIELD STRENGTH METER
Rod Rigg, W6YGZ

A HOMEMADE R. F. WATTMETER
Fred Brown, W6HPH

SPACE DIVERSITY FOR IMPROVED RECEPTION
John Chambers, W6NLZ

EFFECTS OF TOO MUCH R.F. ON TRANSISTORS
Loren Parks, K7AAD

MIDWEST 432 ACTIVITY
Ken Bell, W9OKB

WEST COAST VHF REPORT
Al Olcott, K7ICW

September— A TRIPLER FOR 432 MC
Deane Kidd, W7TYR

432 MOONBOUNCE TEST RESULTS
Loren Parks, K7AAD

WHY SILICON DIODE NOISE GENERATORS ARE
NO DARNED GOOD
Fred Brown, W6HPH
(Article was in error—see Oct. Issue)

HENRY'S PREAMP
Loren Parks, K7AAD

TYPE "N" CONNECTORS FOR RG 17A/U
Jim Geddes, K7ZIR

October—— OSCAR IV GOING UP
Loren Parks, K7AAD

WHAT'S WRONG WITH SILICON DIODE
NOISE GENERATORS
Pitt W. Arnold, WØIPE

SOLID STAGE 432 MC CONVERTER
R. L. Measures, K6OKC

November— AN I. F. NOISE CLIPPER
Tom Curran, W7UAB

A UHF-VHF SIGNAL SOURCE
Louis Hutton, K7YZZ

BUTLER CRYSTAL OSCILLATOR WITH
VARIABLE CAPACITANCE DIODE TUNING
Paul M. Wilson, W4HHK/A4HHK

432 REPORT
Ansel Gridley, W4GJO

THE SAN JOSE ANTENNA CONTEST
Fred Brown, W6HPH

December— TRANSISTORS AS I.F. PREAMPLIFIERS
Henry Cross, W1OOP

PHASE LOCKED LOOPS, PROMISE OR PRACTICALLITY
by Hank Olson, W6GXN

A TRANSISTOR PREAMPLIFIER FOR 432 MC.
R. L. Measures, K6OKC

SKYBEAM

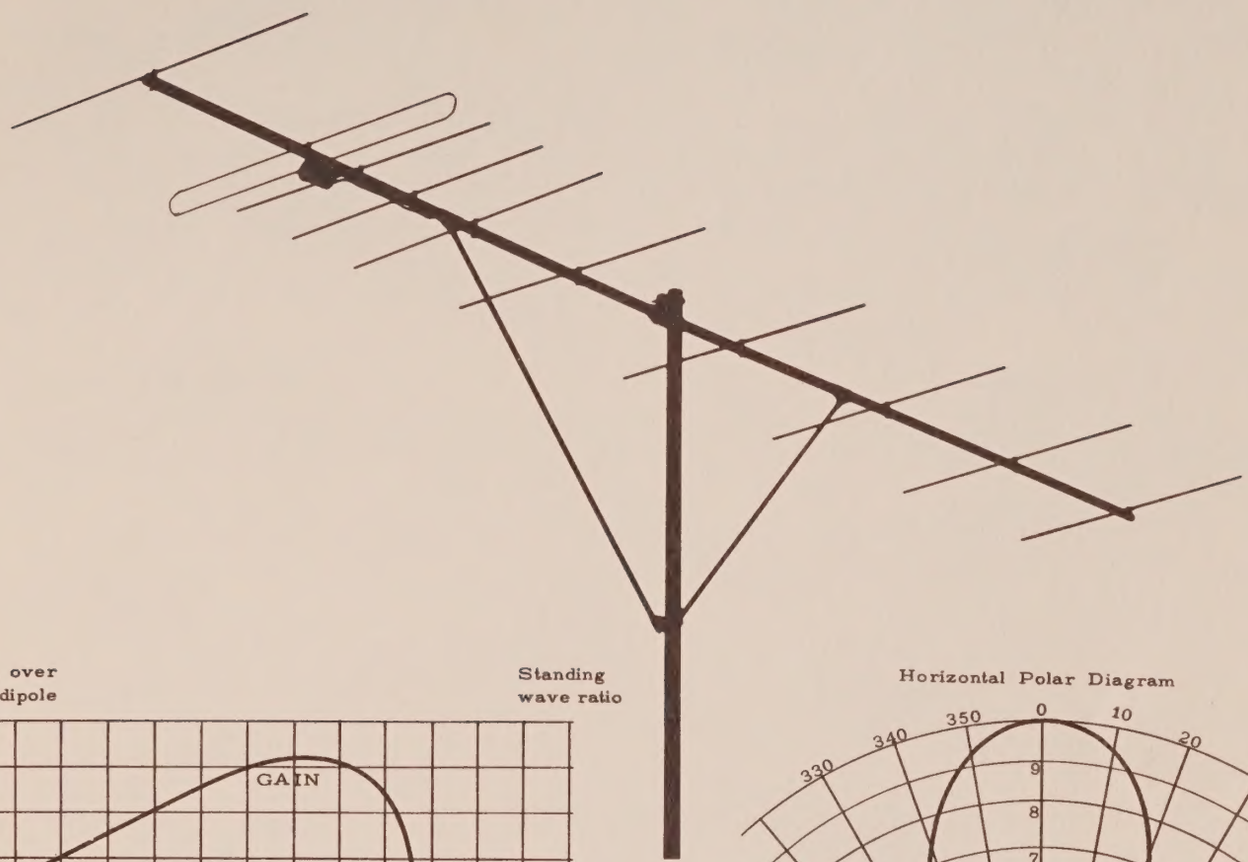

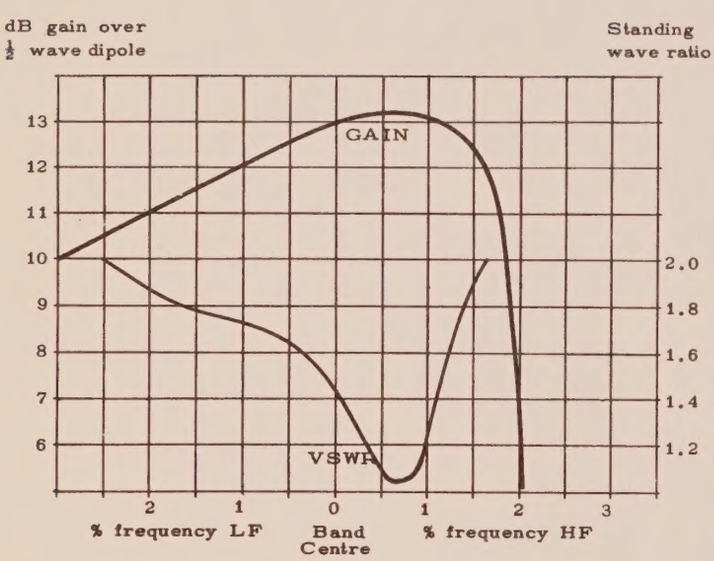

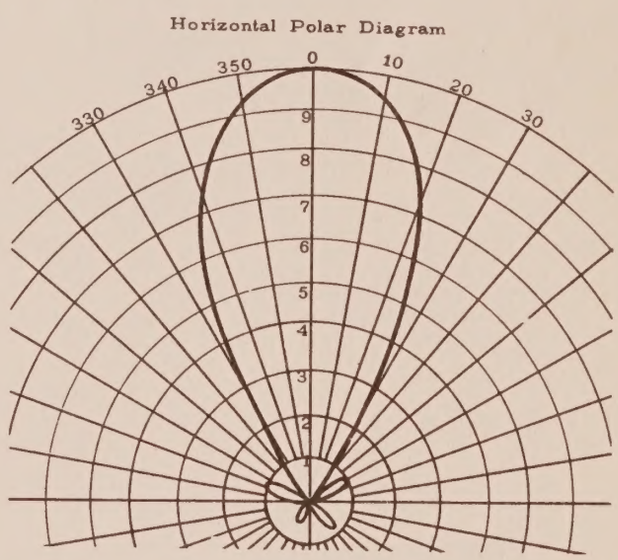

A PROVEN PERFORMER, this two meter SKYBEAM by J Beam Aerials, Ltd. of England. 13 db. gain over a dipole at 146 Mc., 15 db. over an isotropic radiator. Ruggedly built. Boom, elements and support rods of aluminum, 3 brackets of steel (plated). Available for feed with twin lead or coax. See the review in the May VHFER.

Write for literature and prices on this and other J Beams.

Gain, Inc. 27 E. 112th Place Chicago 28, Illinois

LOOK! WE'VE PUT TOGETHER

A LOW COST CLOSED CIRCUIT TV CAMERA KIT!

The new Model 275 for only $189.90 Transportation charges collect.

Fully equipped with many extra features . . .

• Tubes • Test vidicon camera tube • Potentiometers • Capacitors • Rectifiers • Test pattern • Resistors • Factory wired camera deflection components • Lens • Tripod • Cabinet • Transformer • Diodes • Inductors • Typical recommended circuits • Complete.

FREE BONUS! Test Pattern Monoscope Tube. FOR ONLY $189.90

Complete with all accessories listed. No COD. Bulk Pack. Immediate shipment within 1 week.

HERE IT IS! OUR 20th ANNIVERSARY CATALOG 965-S-1. SEND FOR YOUR FREE COPY TODAY.
BEFORE YOU BUY, COMPARE!

DENSON ELECTRONICS P.O. Box 85, Rockville, Connecticut
Telephone 875-5198, Area code 203

METEOR SKEDS WANTED

Meteor scatter and long hall skeds wanted above 145 Mc. Long hall skeds wanted to the southern part of California. Write: James M. McKellips, WB6NFT, 316 Louie Ave., Lodi, California 95242.

Meteor Skeds Wanted. W4CKB, Lake Placid, Florida looking for skeds. Needs Ohio and others. Equipment: KW, long yagi up 70 ft. or 240 ft. above sea level, 75A3 and Parks Nuvistor Converter, Frequency — 144.080. Bev Cavender, W4CKB, Box 88, Lake Placid, Florida.

Meteor Skeds Wanted. Write: Donald H. Learned, Bear Hill Road, North Chichester, New Hampshire.

World's largest listing of Signal Corps technical manuals. Lists available for a stamp. Quaker Electronics, Hunlock Creek, Pennsylvania.

Published by Parks Electronics Lab.
Route 2, Box 35
Beaverton, Oregon

J. J. O'brien
5606 Fifth St.
Rio Linda, Calif. 95673

7

W6GDC
M/67

Return Requested